# S20-2SLC-20

## SFP, Singlemode för upp till 20 km

### Overview

The KGS Fire & Security transceiver module is specifically designed to accommodate high-performance optical fiber, including integrated duplex data link over single mode. Compliant with the SFP Multisource Agreement (MSA), these transceiver modules feature hot-plug capability for easy installation without interrupting host equipment operating online. The SFP Mini GBIC transceiver can install into KGS Fire & Security switch products with 100Base-FX or 1000Base-SX/LX SFP interface.



### Detaljer

- SFP multi-source agreement compliant
- Data rate 100Mbps
- Class 1 laser safety standard IEC 60825 compliant
- LC duplex receptacle
- Low power dissipation
- Plug-and-play capability for easy installation
- Hot Pluggable
- 0°C to +50°C operation temperature
- TTL signal detect indicator
- Single power supply 3.3V
- Comply with the IEEE 802.3ab

# S20-2SLC-20

## SFP, Singlemode för upp till 20 km

## Tekniska specifikationer

### General

| | |
|---|---|
| Category | SFP |
| Port type | Enkelt Tilstand |
| No. of fibers | 2 |
| Port speed | Hurtig |
| Wavelength | 1310 nm |

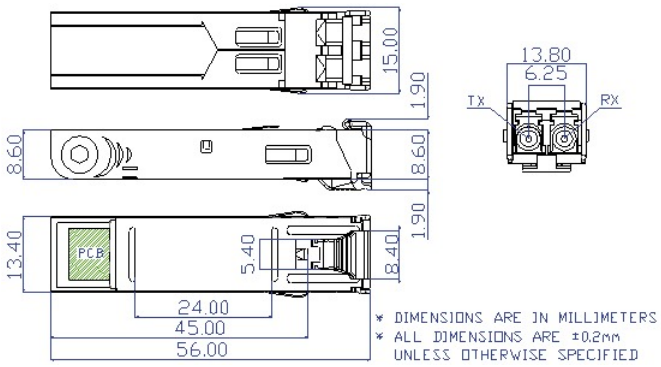


Kidde Global Solutions förbehåller sig rätten att ändra produktspecifikationer utan föregående meddelande. För de senaste produktspecifikationerna, besök se.firesecurityproducts.com online eller kontakta din försäljningsrepresentant.

Last updated on 12 November 2026 - 20:20