S30-1SLC/A-20

SFP, Singlefiber, Singlemode för upp till 20 km (används i par med S30-1SLC/B-20)

Overview

The KGS Fire & Security transceiver module is specifically designed to accommodate high-performance optical fiber, including integrated duplex data link over single mode. Compliant with the SFP Multisource Agreement (MSA), these transceiver modules feature hot-plug capability for easy installation without interrupting host equipment operating online. The SFP transceiver can install into KGS Fire & Security switch products with 100Base-FX or 1000Base-SX/LX SFP interface.



Detaljer

- SFP multi-source agreement compliant
- Data rate 1.25Gbps
- Class 1 laser safety standard IEC 60825 compliant
- 1(single) Fiber to be deployed together with S30-1SLC/B-20
- LC connector
- Low power dissipation
- Plug-and-play capability for easy installation
- Hot Pluggable
- 0ºC to +50ºC operation temperature
- TTL signal detect indicator
- Single power supply 3.3V
- Comply with the IEEE 802.3ab

S30-1SLC/A-20

SFP, Singlefiber, Singlemode för upp till 20 km (används i par med S30-1SLC/B-20)

Tekniska specifikationer

General

Category	SFP
Port type	Enkelt Tilstand
No. of fibers	1
Port speed	Gigabit
Wavelength	1310 nm, 1490 nm

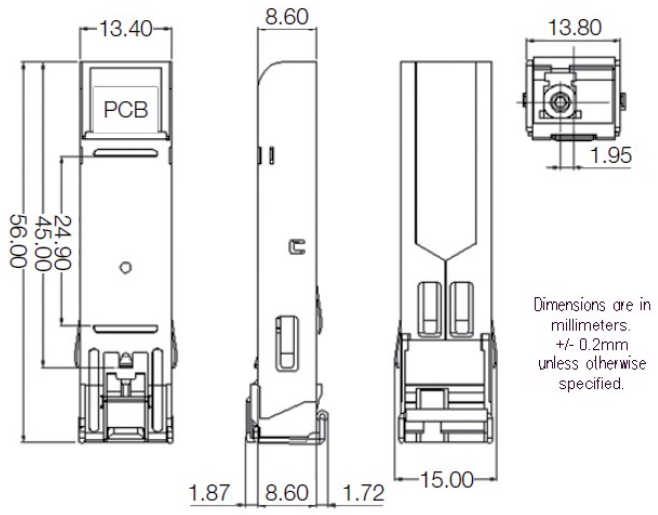

Kidde Global Solutions förbehåller sig rätten att ändra produktspecifikationer utan föregående meddelande. För de senaste produktspecifikationerna, besök se.firesecurityproducts.com online eller kontakta din försäljningsrepresentant.

Last updated on 12 November 2026 - 20:20