HB304

Surface mount panic switch, latching red LED indicator and screw terminals, SPDT, white



Details

- Mounts underneath or on side of desk or counter
- Smooth housing prevents accidental damage to clothing
- Actuating lever designed to accommodate only tip of finger
- Reed contact resets when lever is in closed position
- Version with latching LED available

HB304

Surface mount panic switch, latching red LED indicator and screw terminals, SPDT, white

Technische specificaties

General

Type	Omskifter
Water resistant	No
LED	Yes
Latching LED circuit	Yes
Alarm contact	Jednobiegunowy, przełączny
Connections	Screw terminals

Wired/wireless

Wired-wireless	Kablede

Electrical

Power supply value	7 to 15 VDC

Physical

Physical dimensions	74 × 45 × 19 mm
Colour	Hvid

Environmental

Operating temperature	-18 to +43°C

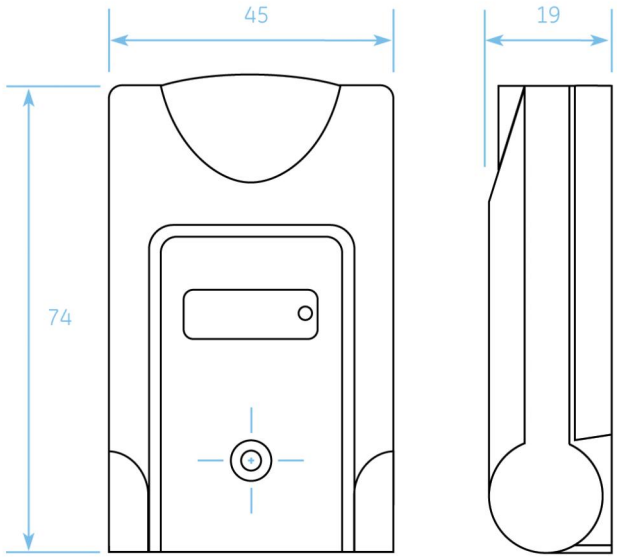

Als een bedrijf van innovatie behoudt Kidde Global Solutions zich het recht voor productspecificaties zonder kennisgeving te wijzigen. Ga voor de nieuwste productspecificaties online naar be.firesecurityproducts.com of neem contact op met uw verkoopvertegenwoordiger.

Last updated on 12 November 2026 - 18:57