DC115

Overhead cont. 5 wire

Industrial contact

The DC115/DC118 are designed to be installed in commercial and industrial environments where a rugged sealed unit is required. It is ideal for metal doors, overhad doors, fences and gates. Each model features a high strength extruded aluminium housing and is completely encapsulated in an exclusive polyurethane potting compound.

Comprehensive range

The range features wide gap distances and several models to meet any application need. Armoured cable is available.

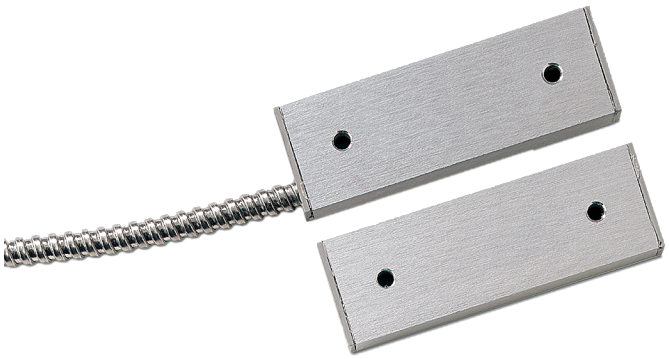

Details

- Mounting brackets available for gates, garage doors, freezers
- Rugged construction for long life
- Convenient surface mounting
- 2 m armoured cable
- Tamper loop provided
- DC115 is polarity-sensitive with reference to magnet direction

DC115
Overhead cont. 5 wire

Technical specifications

General

Application type	Surface mount
Contact type	CO
Connectivity	5 wires, 2 m

Wired/wireless

Wired-wireless	Wired
Operating gap	9 to 62 mm

Physical

Dimensions magnet	76 x 12 x 25 mm
Dimensions contact / sensor	76 x 12 x 25 mm
Colour	Silver
Material	Anodised aluminium finish

Regulatory

EN50131 grade	Grade 2

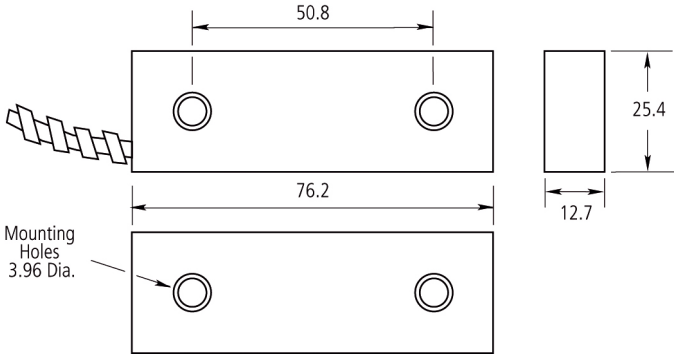

As a company of innovation, Kidde Global Solutions reserves the right to change product specifications without notice. For the latest product specifications, visit firesecurityproducts.com online or contact your sales representative.

Last updated on 18 June 2026 - 14:22