# AB360

## 6" Fire Bell, indoor use, 24 VDC

### General

The AB360 is a 150 mm (6 inch) internal bell with English "FIRE ALARM" text, designed as an acoustic fire annunciator. Thanks to its small dimensions and overall design, it is ideal for in-door installation. The AB360 uses a 24 VDC supply and with the advantage of having very low current consumption, makes them compatible with most fire alarm systems.

### Applications

The AB360 is ideal for installing on any site, but are specifically good for installing on sites where a great number of bells are required. Becuase of the low current consumption, excessive power supplies can be avoided.

### Construction

Designed for ease of installation, the AB360 features a robust steel gong. This ensures the reliable generation, of the universally recognizable fire alarm bell sound.




### Details

- Low current consumption
- Universally recognisable sound
- Diode polarised
- EN54-3 Approved

# AB360
## 6" Fire Bell, indoor use, 24 VDC

## Technical specifications

### General

| | |
|---|---|
| Compatibility | Conventional 24 VDC notification circuits |

### Electrical

| | |
|---|---|
| Power supply type | 24 VDC |
| Operating voltage | 19 to 28 VDC |
| Current consumption | 20 mA |
| Number of connection terminals | 2 |
| Cable size | < 2.5 mm² |
| Cable specification | 2 Core |

### Sounder

| | |
|---|---|
| Output level | 95 dB(A) at 1 m |

### Physical

| | |
|---|---|
| Physical dimensions | 160 x 64 mm (⌀ x d)<br>150 mm (6") bell diameter |
| Net weight | 920 g |
| Colour | Red |
| Mounting type | Base mount, Wall mount |
| Mounting position | Wall |
| Mounting base | Deep |
| Material | Steel |

### Environmental

| | |
|---|---|
| Vandal proof | No |
| Operating temperature | -10 to +55°C |
| Environment | Indoor |
| IP rating | IP21C |

### Regulatory

| | |
|---|---|
| Compliancy | CE, REACH, RoHS 3, WEEE |
| Certification | CPR |
| Standards | EN54-3 |

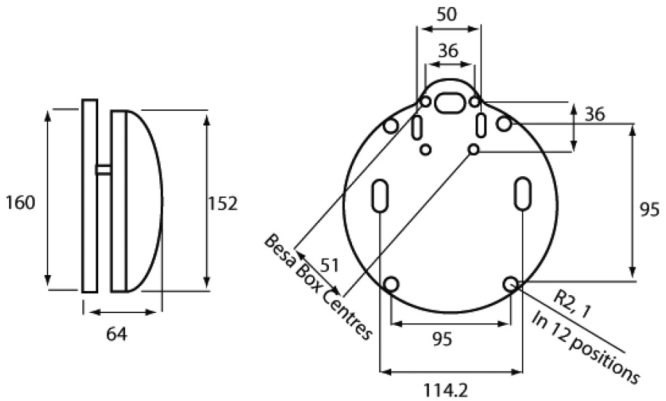


KIDDE GLOBAL SOLUTIONS

As a company of innovation, Kidde Global Solutions reserves the right to change product specifications without notice. For the latest product specifications, visit firesecurityproducts.com online or contact your sales representative.

Last updated on 16 October 2026 - 11:46