S25-1MLC-A-2

SFP-Port 100Base-FX Mini-GBIC Module, 1 Fiber, 2 km, Multi-Mode, 1300 nm, A End, -40 to 75

Overview

The KGS Fire & Security transceiver module is specifically designed to accommodate high-performance optical fiber, including integrated duplex data link over single mode. Compliant with the SFP Multisource Agreement (MSA), these transceiver modules feature hot-plug capability for easy installation without interrupting host equipment operating online. The SFP transceiver can install into KGS Fire & Security switch products with an 100Base-FX interface.



Dettagli

- SFP multi-source agreement compliant
- Max data rate 155 Mbits/s
- Class 1 laser safety standard IEC 60825 compliant
- 1 fiber multimode
- LC connector
- Low power dissipation
- Plug-and-play capability for easy installation
- Hot Pluggable
- -40°C to +75°C operation temperature
- TTL signal detect indicator
- Single power supply 3.3V
- Comply with the IEEE 802.3ab

S25-1MLC-A-2

SFP-Port 100Base-FX Mini-GBIC Module, 1 Fiber, 2 km, Multi-Mode, 1300 nm, A End, -40 to 75

Specifiche tecniche

General

Category	SFP
Port type	Multi Tilstand
No. of fibers	1
Port speed	100 Mbps
Wavelength	1310 nm, 1550 nm

Regulatory

Compliancy	CE, REACH, RoHS 2

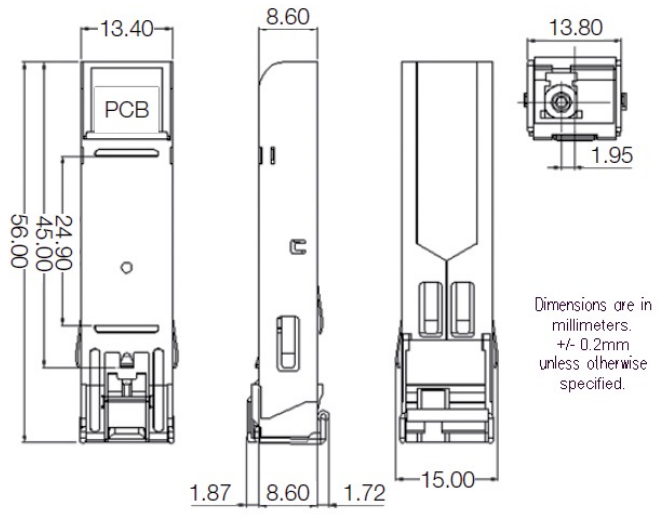

In quanto azienda in continua innovazione, Kidde Global Solutions si riserva il diritto di modificare le specifiche del prodotto senza preavviso. Per avere informazioni sempre aggiornate, visita it.firesecurityproducts.com online o contatta il tuo riferimento commerciale.

Last updated on 12 November 2026 - 20:20