TVGP-M01-0201-PTZ-G

Telecamera PTZ IP compatta TruVision da 2 MP, H.265+, IR da 50 m, zoom 10x, PoE+/12VDC, alimentatore incl.

Overview

TVGP-M01-0201-PTZ-G is a compact Pan Tilt Zoom IP camera for use in both indoor and outdoor installations. The camera's 2 megapixel resolution combined with excellent low light capabilities ensures you capture the required level of detail at all times.

The camera is fully programmable, with up to 300 presets along with 8 patrol and preset tours.

The 8-zone privacy mask feature allows these cameras to block out sensitive areas. In addition, the variety of intelligence features and analytics adds substantial value and enhanced performance to any video system.

Video intelligence

The camera comes with a various built-in intelligent video features like line crossing detection, intrusion zone detection, region entry/exit detection and more. Some of these intelligence features can be refined further by adding person/vehicle classification to filter out unwanted events which automatically results in more efficient alarm event and storage management.

Technology

The camera features H.265+ compression to optimize its bandwidth and storage requirements. At the same time, H.264 which is also supported, allows the camera to be connected to legacy installations where needed.
ONVIF, PSIA and CGI command sets ensure that this camera can also be easily connected to virtually any video surveillance system.



Dettagli

- 2MP resolution
- 10x optical zoom, 16x digital zoom
- IR illumination up to 50 m
- Video intelligence with person/vehicle target classification
- Built-in microphone and speaker, audio alarms supported
- Flashing white alarm LED
- H.265+ compression

TVGP-M01-0201-PTZ-G

Telecamera PTZ IP compatta TruVision da 2 MP, H.265+, IR da 50 m, zoom 10x, PoE+/12VDC, alimentatore incl.

Specifiche tecniche

General

Technology	IP
Video standard	NTSC, PAL
OSD	Text Overlay
Privacy masking	24 programmable polygon privacy masks, mask color or mosaic configurable
Software compatibility	TruVision Navigator, TVRmobile, Web Browser

Camera

Sensor size	1/1.8"
Max. resolution	2 MP
Sensor scan	Progressive
Sensor type	CMOS
Digital S/N ratio	≥ 55 dB
Shutter time	1/1 to 1/30,000 s

Lighting performance

WDR type	True WDR
WDR	120 dB
Day/night	True Day/Night
Motorized IR cut filter	Yes
Color sensitivity	Color: 0.005 Lux @ (F1.3, AGC ON), B/W: 0.001 Lux @ (F1.3, AGC ON), 0 Lux with IR
Infrared (IR)	Yes
IR range	50 m
IR wavelength	850nm

Encoding

Video streams	3
Main stream compression	H.264, H.264+, H.265, H.265+
Sub stream compression	H.264, H.265, MJPEG
Third stream compression	H.264, H.265, MJPEG
Video bit rate	32 to 16 Mbps
Main stream resolutions	1280 x 720 (XVGA), 1280 x 960 (720p), 1920 x 1080 (1080p)
Sub stream resolutions	352 x 288 (CIF), 640 x 480 (VGA), 704 x 576 (4CIF)
Third stream resolutions	1280 x 720 (XVGA), 1280 x 960 (720p), 1920 x 1080 (1080p), 352 x 288 (CIF), 640 x 480 (VGA), 704 x 576 (4CIF)
Max. resolution @ fps	1920 × 1080 @ 25 fps

Lens

Focal length	2.8 to 28 mm - Horizontal FoV 108 to 19.8°, vertical FoV 56.4 to 11.5°
f-stop	Max. F1.3
Auto iris	Yes
Auto focus	Yes
Motorized zoom	Yes

Pan/tilt/zoom

Pan	Pan speed: configurable from 0.1 to 60°/s; preset speed: 60°/s
Tilt	Tilt speed: configurable from 0.1 to 50°/s, preset speed 50°/s
Endless pan	No, pan range 355°
Auto flip	No
Optical zoom	10x
Digital zoom	16x
Preset positions	300
Preset tours	8

Network

Network interface	RJ-45 10/100 Mbps self-adaptive Ethernet interface
Integration	CGI, ISAPI, ONVIF Profile G, ONVIF Profile S, ONVIF Profile T, SDK
Supported network protocols	802.1x, Bonjour, DDNS, DHCP, DNS, ezDDNS, FTP, HTTP, HTTPS, ICMP, IGMP, IPv4, IPv6, NTP, PPPoE, RTCP, RTP, RTSP, SNMP, TCP/IP, UPnP

Audio

Audio compression	G.711, G.722.1, G.726, MP2L2, PCM
Audio in	1 built-in microphone
Audio out	1 built-in speaker, pre-defined and custom audio alarms supported
Audio bit rate	64 Kbps (G.711)/16 Kbps (G.722.1)/16 Kbps (G.726)/32-192 Kbps (MP2L2)

Alarm I/O

Alarm inputs	1
Alarm outputs	1 relay output, 12 VDC power output of max. 0.7 W, flashing white alarm LED, audio alarms
Alarm I/O connection	Individual wires

Storage

Local storage type	Built-in memory card slot, support microSD/SDHC/SDXC card
Max. SD card capacity	256 GB

Video intelligence

Alarm trigger	HDD error, HDD full, Invalid login, IP address conflict, Network disconnected
ROI	8 fixed regions for each stream
Smart event	Audio exception detection, Face capture, Intrusion detection, Line crossing detection, Motion detection, Object removal detection, Region entrance detection, Region exiting detection, Unattended baggage detection

Electrical

Operating voltage	12 VDC, PoE (802.3at) 12VDC adapter included (without mains lead)
Power consumption	Max. 24 W

TVGP-M01-0201-PTZ-G

Telecamera PTZ IP compatta TruVision da 2 MP, H.265+, IR da 50 m, zoom 10x, PoE+/12VDC, alimentatore incl.

Physical

Physical dimensions	Ø 156.4 × 142.1 mm Ø 6.16 × 5.59 in.
Net weight	Approx. 1.90 kg Approx. 4.19 lb.
Colour	Grey (Pantone 428c)
Material	Metal
Form Factor	PTZ
Mount	Ceiling mount

Environmental

Operating temperature	-30 to 65 °C -22 to 149 °F
Relative humidity	90% or less non-condensing
IP rating	IP66

Regulatory

Compliancy	CE, EMC, FCC, RCM, REACH, RoHS 3, UKCA, UL, WEEE

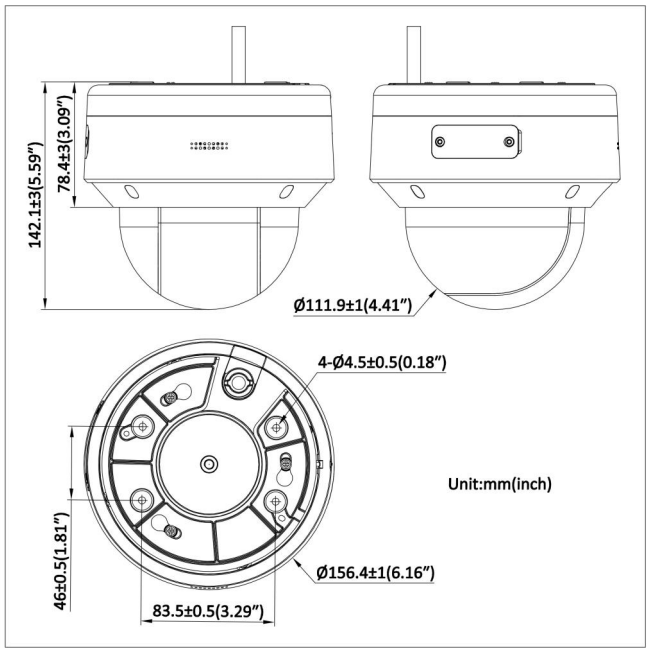

In quanto azienda in continua innovazione, Kidde Global Solutions si riserva il diritto di modificare le specifiche del prodotto senza preavviso. Per avere informazioni sempre aggiornate, visita it.firesecurityproducts.com online o contatta il tuo riferimento commerciale.

Last updated on 12 November 2026 - 18:57