TVD-BB3A-B

TruVision angled back box for fixed lens turret cameras, black

Overview

The TVD-BB3A-B back box can be used for the fixed lens Turret IP cameras, black.



Details

- Back box to manage camera cabling and connections
- Compatible with M Series fixed lens turret IP cameras, black

TVD-BB3A-B

TruVision angled back box for fixed lens turret cameras, black

Technical specifications

General

Bracket type	Camera
Bracket mounting part	Mount connection box
Mount type	Back box

Physical

Physical dimensions	Ø 157 × 165.7 × 61.8 mm Ø 6.18 × 6.52 × 2.43 in.
Net weight	586 g 1.29 lb.
Colour	Black
Material	Aluminium

Compatible products

Category	Reference	Description
Camera	TVGP-M01-0201-TUR-B	TruVision 2MP, H.265+, Smart IP Turret Camera, 30 m IR, 2.8 mm lens, black
Camera	TVGP-M01-0401-TUR-B	TruVision 4MP, H.265+, Smart IP Turret Camera, 30 m IR, 2.8 mm lens, black

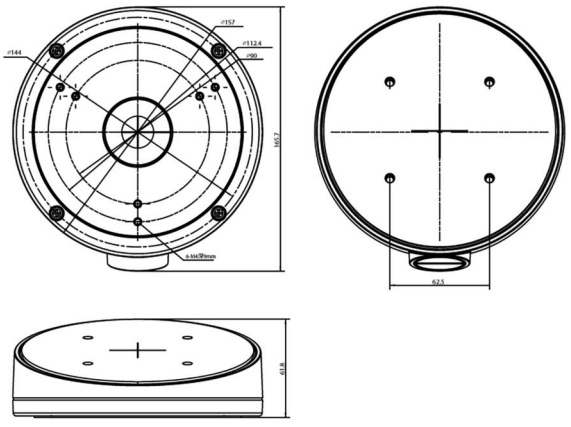

As a company of innovation, Kidde Global Solutions reserves the right to change product specifications without notice. For the latest product specifications, visit firesecurityproducts.com online or contact your sales representative.

Last updated on 27 August 2026 - 19:23