TVMI-PM

TruVision Multi-imager and P/M Series IP PTZ Pendant Mount bracket, 57 mm / 2.24"

Overview

The TruVision TVMI-PM Pendant Mount bracket allows multi-imager camera TVS-5101 to be installed on a ceiling. Addtitional extension elements are available to increase distance between camera and ceiling.

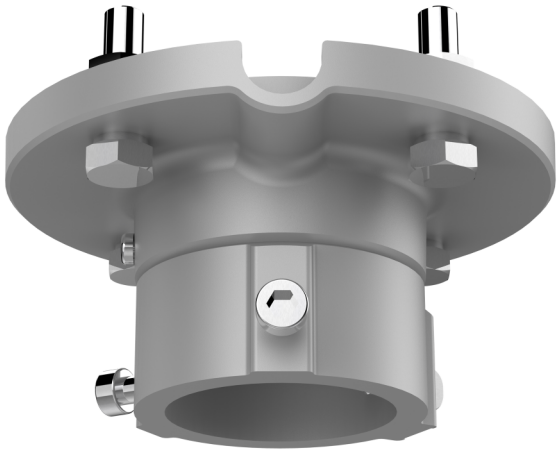

Details

- Compatible with TVS-5101 TruVision multi-imager camera
- Aluminium alloy material with surface spray treatment

TVMI-PM

TruVision Multi-imager and P/M Series IP PTZ Pendant Mount bracket, 57 mm / 2.24"

Technical specifications

General

Bracket type	Camera
Support type	TruVision 360 degrees cameras
Bracket mounting part	Mounting bracket
Mount type	Pendant mount
Cable management	Yes

Physical

Physical dimensions	116.5 x 57 mm 4.59 x 2.24 in.
Net weight	380 g 0.84 lb.
Colour	Grey (Pantone 428c)
Material	Aluminium

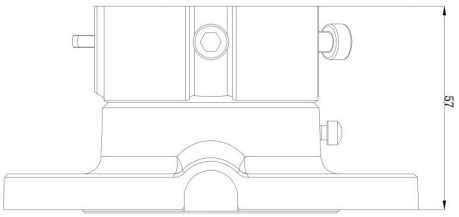

As a company of innovation, Kidde Global Solutions reserves the right to change product specifications without notice. For the latest product specifications, visit firesecurityproducts.com online or contact your sales representative.

Last updated on 28 August 2026 - 11:17