KE-AS3005W-CM

Excellence Series intelligent addressable visual alarm, ceiling mount

General

The ZPC760W is a ZP7 series, addressable WHITE visual alarm device (VAD), approved to EN54:23 for ceiling mount applications. It features a clear lens with red LED element and incorporates a switch setting allowing it to be assigned a unique address on a Ziton fire panel loop.

Designed for installation at a height of up to 3m and with a discrete appearance, the ZPC760W with its deep base is suitable for a variety of applications. Its unique lens design distributes light evenly in a cylindrical shape to achieve the required illumination, whist using minimum current.

High Intensity Visual Signal

Designed to complement audible alarms, the ZPC760W provides a high intensity, synchronised visual signal for applications where alarm sounders alone are ineffective for notification or evacuation of a premises. In areas with high levels of background noise and manufacturing areas where intense industrial noise demands the use of ear protection, residential areas or other confined spaces such as bedrooms, bathrooms and toilets, or places with occupants who may be hard of hearing, the use of visual indication of alarms are ideal.

The ZPC760W is designed to meet the requirements of most local disability legislation and is certified as a primary alarm notification device under EN54:23.

Current Consumption and System Loads

Depending on the system requirements, the ZPC766W may be set to use less power. When coverage areas are small (less than 7.5 m radius), reducing the required range minimises the system current load. In addition the flash frequency may be set to 0.5 Hz (1 flash every 2 seconds) instead of 1 Hz (1 flash every second) in instances where power consumption needs to be further reduced.

External Power Supplies

The ZPC766W is installed using a fist fix base supplied with the unit. Loop and/or power cables for the VAD are connected in this base. In systems where loop lengths or current requirements are high, the ZPC766W may be powered directly from an external, EN54:4 approved power supply. The external supply is supervised and should there be a problem, the VAD automatically notifies the fire panel.



Details

- Standard first fix base shared with point detectors for ease of planning, logistics and installation
- Base lock, address tag, trim skirt and surface cabling support for easy installation in all conditions
- Loop powered with battery assisted activation allowing up to 128 devices per loop
- 3 selectable VAD power levels that can be reconfigured from the CIE
- Multi-stage evacuation support for application flexibility
- Pre-and post activation self testing ensuring maximum safety
- Automatic synchronisation
- Tri-colour diagnostic LED indicator for fast commissioning and fault finding support

KE-AS3005W-CM

Excellence Series intelligent addressable visual alarm, ceiling mount

Technical specifications

General

Compatibility	Kidde Commercial Excellence Systems
Addressing method	DIL switch
Monitoring	Activated, Battery level, Continuously self-checking, Fault

Electrical

Power supply type	Batteries, Loop powered
Batteries	3 x CR123 (optional)
Operating voltage	17 to 29 VDC
Communication voltage	4 to 11 V pulsed
Current consumption	250 µA (Quiescent) Refer to the installation sheet for alarm current values (setting dependent)

VAD

Colour	Red
Rating	C-3-6 (Low) / C-3-7.5 (Mid) / C-3-9 (High)
Floor coverage	< 63.6 m² total < 40.5 m² covering squares
Flash frequency	0.5 Hz (1 flash every 2 s)

VID

Synchronization	Supported

Physical

Physical dimensions	111 x 87 mm (Ø x H)
Net weight	300 g
Colour	Traffic white (RAL9016)
Mounting type	Base mount
Mounting position	Ceiling
Mounting height	Up to 3 m
Material	PC / ABS

Environmental

Operating temperature	-10 to +55°C
Storage temperature	−25 to +75°C
Relative humidity	10 to 93% (noncondensing)
Environment	Indoor
IP rating	IP21C

Regulatory

Compliancy	CE, REACH, RoHS 3, WEEE
Certification	EN54-23

Compatible products

Category	Reference	Description
Detection device	KE-ASA-AUXW	Intelligent addressable notification accessory - deep base (white)
Detection device	KE-DB3010W	Excellence series intelligent device accessory - standard base

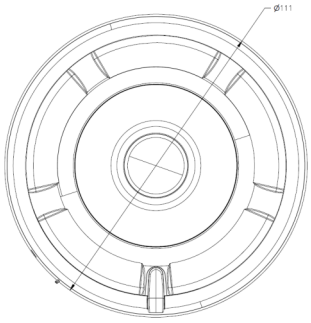

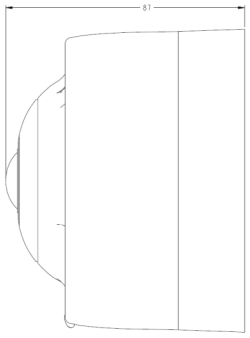

KIDDE COMMERCIAL

As a company of innovation, Kidde Global Solutions reserves the right to change product specifications without notice. For the latest product specifications, visit firesecurityproducts.com online or contact your sales representative.

Last updated on 16 June 2026 - 14:38