DC102R4.7

Contact with 4.7 kohm (white)

Easy Installation

The DC102-series are ideal for residential and commercial applications where terminal connections are preferred. The unit features positive clamping terminals with anti-rotation lugs and captured screws with combination heads. These features allow for easy, quick installations.

Comprehensive range

The range includes wide gap, SPDT and biased versions for higher security. This makes it one of the most popular contacts available in the industry today.

Durability and dependability

These high performance magnetic contacts have been designed to facilitate installation and ensure durability and dependability. Most are conservatively rated at 10,000,000 cycles, guaranteeing a long life. Every reed connection is hand soldered and each magnetic contact is tested before they leave the factory.

High quality components and materials

Reed legs are plated with rhodium or ruthenium, and hermetically sealed in dry nitrogen. This offers superior protection against sticking and provides a moisture free environment therefore preventing corrosion.



Details

- Ideal for residential and commercial
- Convenient surface mounting
- Versions with built-in resistors available

DC102R4.7

Contact with 4.7 kohm (white)

Technical specifications

General

Application type	Overflademontering
Contact type	4K7 end-of-line resistor
Connectivity	Screw

Wired/wireless

Wired-wireless	Kablede
Operating gap	18 mm (max.)

Physical

Physical dimensions	63 x 12 x 19 mm
Colour	Hvid

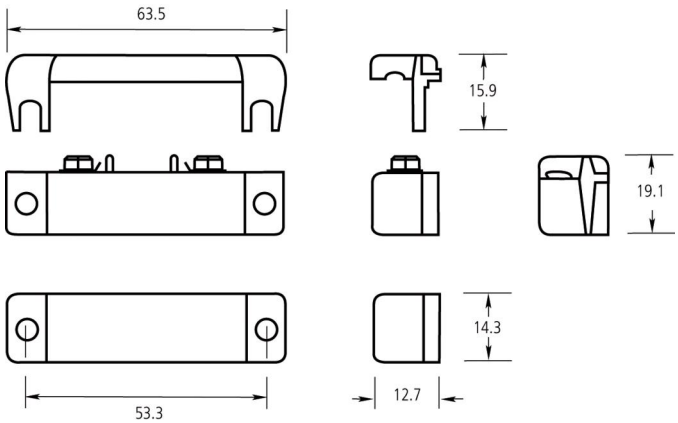

As a company of innovation, Kidde Global Solutions reserves the right to change product specifications without notice. For the latest product specifications, visit firesecurityproducts.com online or contact your sales representative.

Last updated on 13 August 2026 - 11:05